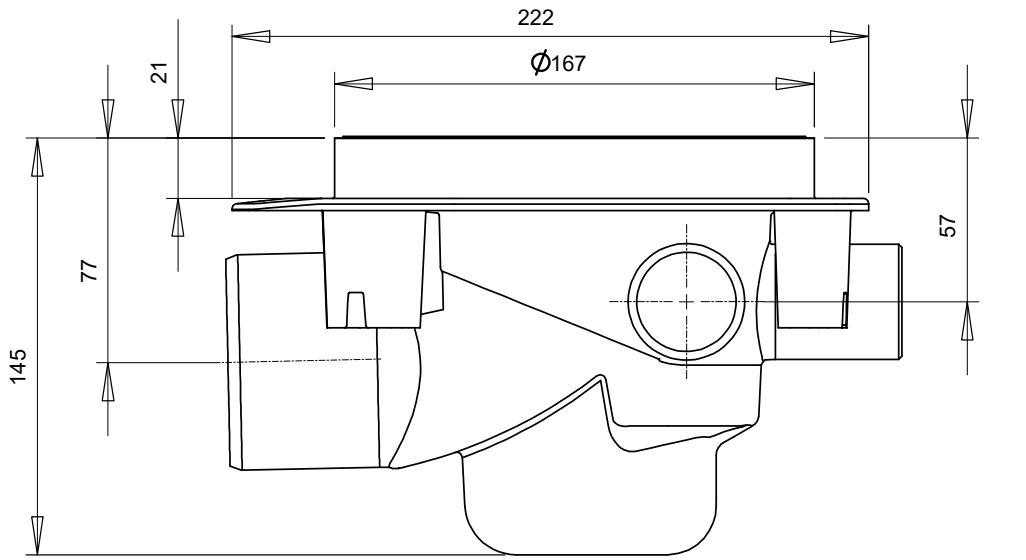

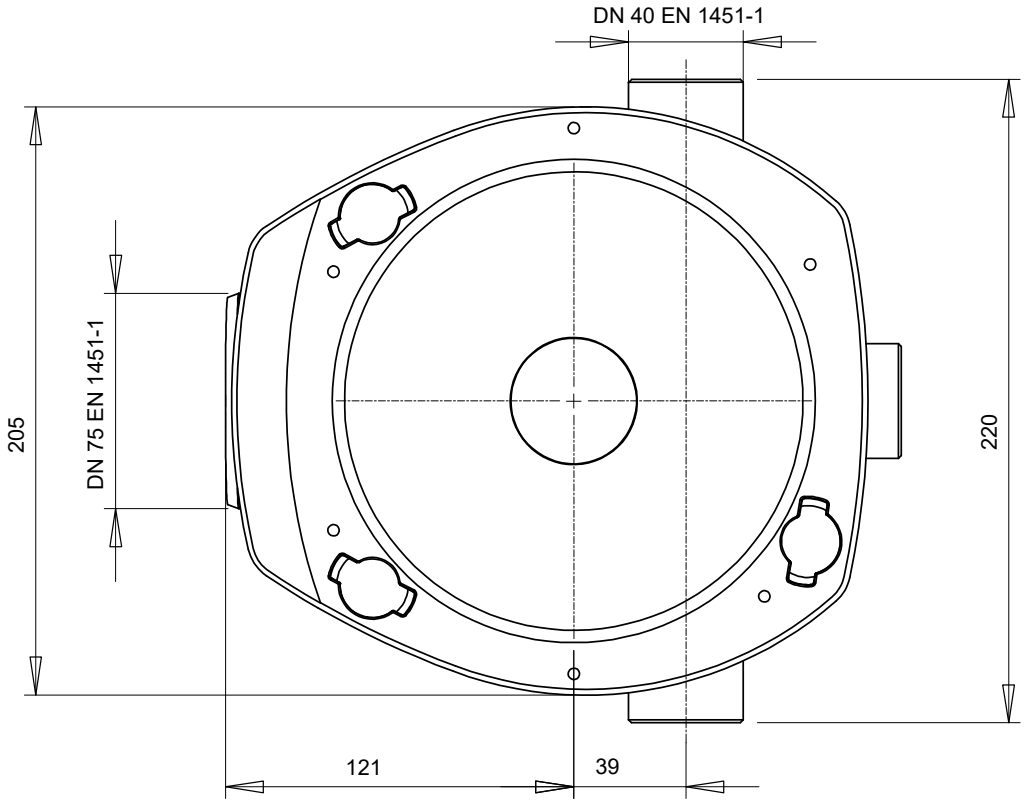

vieser	Vieser One floor drain DN 75 3×32/40 with support legs
	52601